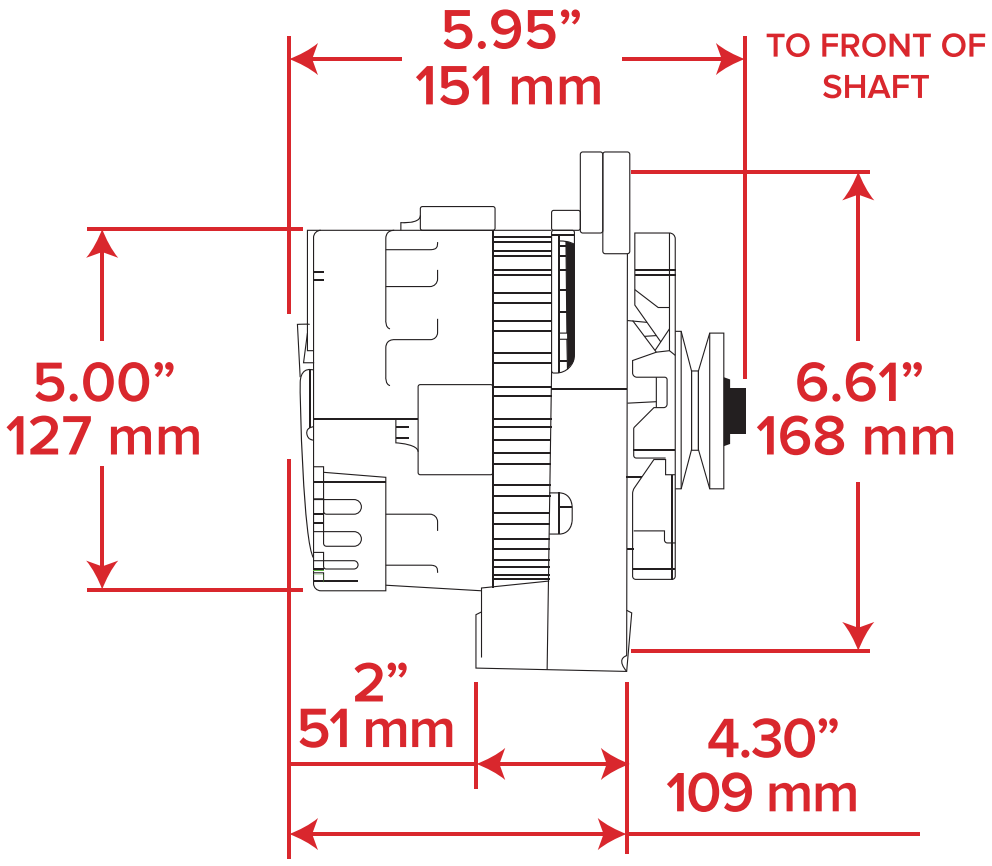ES1005 ALTERNATOR DIMENSION